WABCO

SERVICE MANUAL 5048

H-5 SEARCHLIGHT SIGNALS

* * * * *

Installation and Maintenance

I. GENERAL INSTRUCTIONS

After the signal has been mounted on the pole and the fastenings used for shipping removed from the reflector assembly and plug connectors, the external wires can be pulled in and connected, and the slack dressed in the case as shown in Figure 1.

Figure 2 shows the method of installing the operating unit. The unit held as shown is set on its track and pushed as far into the case as possible with the near end of the unit slightly raised off the track and the lock arm moved to the left. The near end of the unit should be lowered onto its track and the lock arm moved to the center position. Lift upward on the lock arm to check that the operating unit is properly locked in position.

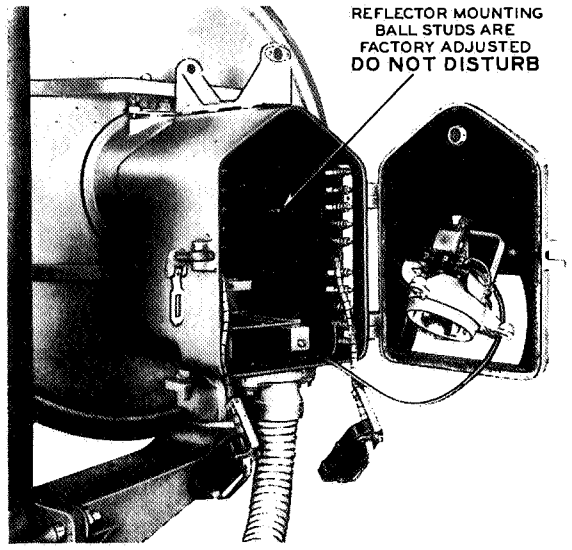

Fig. 1. Style H-5 Signal with External Wires Connected

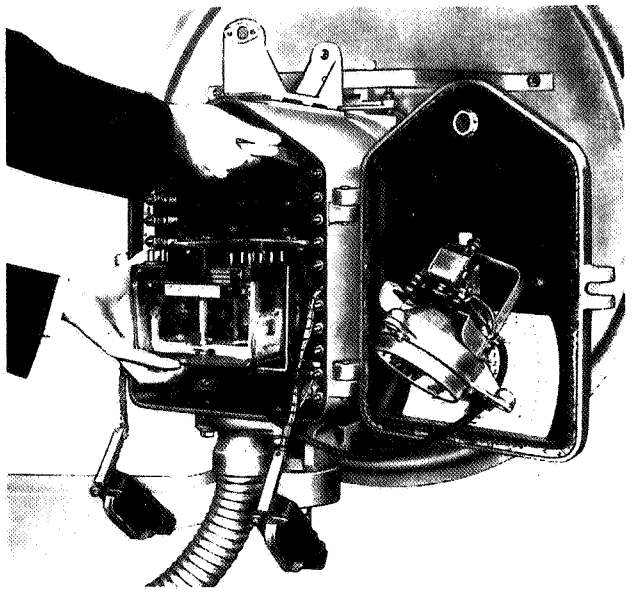

Fig. 2. Installing Operating Unit in H-5 Signal

October, 1979
A-10/79-500-2345-1

PRINTED IN U.S.A.

UNION SWITCH & SIGNAL DIVISION
AMERICAN STANDARD INC.
Swissvale, PA 15218

II. ALIGNMENT

To align the signal horizontally, loosen jam nut B and nut A, Figure 3, turn the signal on stud bolt C as an axis until the vertical cross-hair in the sighting device located on the top of the signal case intersects the point on the track where the engineman should first see the indication. The nut A, and then the jam nut B should be tightened, and the adjustment should be checked by means of the sight to make sure that it has not been changed by the tightening of the nuts.

To align the signal vertically, loosen nut E and adjust nut D upward or downward until the horizontal cross-hair in the sight intersects the point on the track

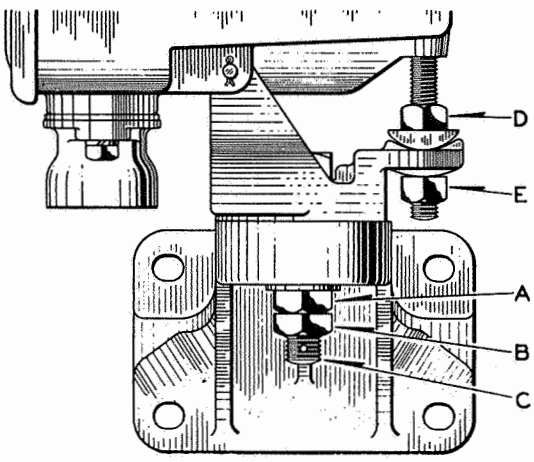

Fig. 3 Adjustable Bracket for "Side-of-Mast" Mounting

where the engineman should first see the indication. Tighten nut E and check the adjustment to see that the proper alignment has been maintained. As the light beam is parallel to the sighting device on the signal case, the center line of the beam will be pointed to the selected location on the track.

For Dwarf Signals, the required range is comparatively short, accuracy of alignment is not so important, and a sighting device is not ordinarily furnished. Foundation bolts should be set to give approximately the correct horizontal alignment. The base casting has slotted holes to provide for some rotation of the signal in the horizontal plane for final horizontal alignment. The vertical adjustment is the same as for high signals.

III. ADJUSTMENT OF CLOSE-UP INDICATION

The Style H-5 Searchlight Signal is equipped with a special prism, approximately 3 inches in diameter, known as a close-up prism. This prism is used to provide an indication in the line of sight of an engineman in a locomotive cab after he has passed out of the limits of the spread of the main beam of the signal as he approaches the signal. Figure 4 shows a close-up prism and indicates the direction the light is deflected with reference to the prismatic formations on the back side of the glass, the word "top" moulded in the rim of the glass and the arrow on the front face of the prism.

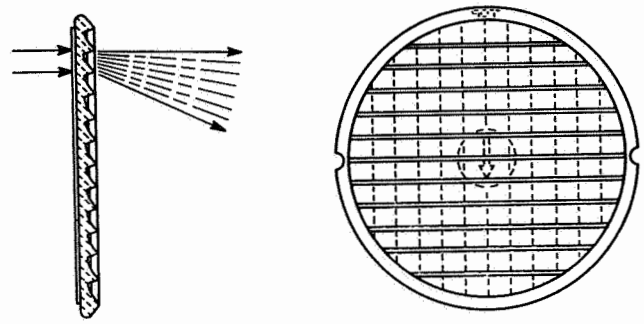

Fig. 4. Close-Up Prism

Since the signals are located at various heights and distances from the track, it is impossible to adjust the close-up prism at the Factory for all conditions of installation. However, to produce the indication at a point most easily found by installation forces in the field, the prism is adjusted at the Factory to produce the close-up indication vertically downward on high signals, and vertically up-ward on dwarf signals. The installation forces in the field should readjust the indication to meet local conditions.

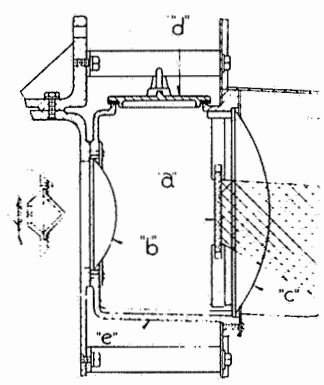

Access to the close-up prism "a", Fig. 5, located between the inner and outer lenses "b" and "c", is obtained by removing the hand-hole cover "d" on the lens adapter "e".

Fig. 5 Location of Close-Up Prism

To adjust the close-up indication, an observer should be stationed in a locomotive cab at a distance of 40 feet from the signal, indicated by the point "X", Figure 6. Signals are located at various heights and distances from the track. The location selected for point "X" in advance of the signal is satisfactory for all customary locations of signals. Point "X", located at a distance of 12 feet above the rail, is the approximate height of an engineman's eye. A special stepladder so constructed that the observer's eye is located at the point "X" may be used if a locomotive is not available. To adjust the indication, rotate the close-up prism until the maximum indication is observed at the point "X".

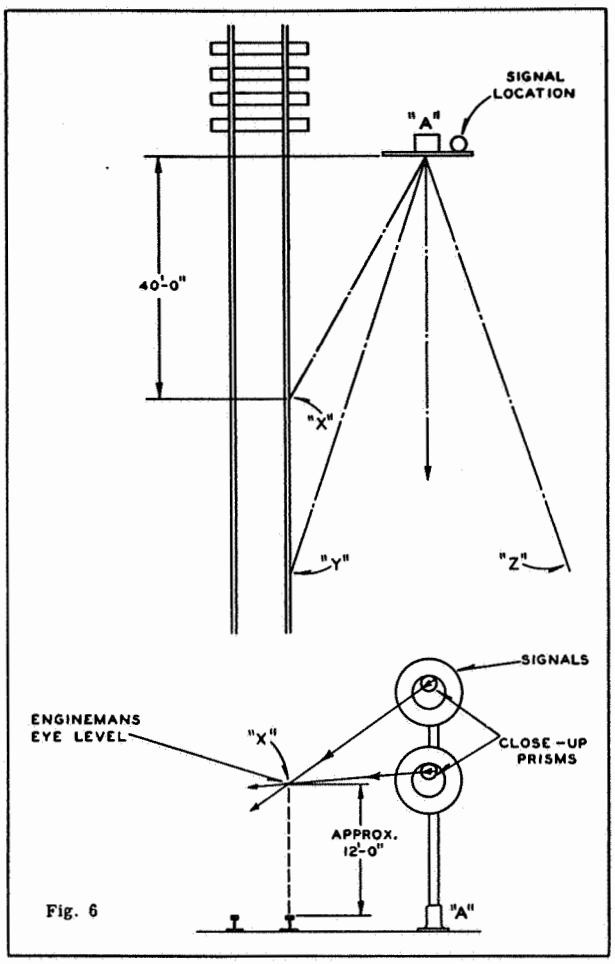

Fig. 6

For ground signals located 12 feet above the rail, the close-up prism must be turned to direct the indication approximately horizontal in order to be in line with the point "X" as shown in the lower view, Figure 6. For other signals, located at greater heights such as the upper unit, the close-up prism will not require as much rotation from the factory setting as signals located at a lesser height.

IV. ALIGNMENT ON CURVES

Standard Searchlight Signals are designed to produce a concentrated light beam for long range indication on tangent track or track of small curvature. Special cover glasses can be furnished when additional spread of light beam is required to properly signal track of greater curvature. See Instruction Pamphlet U-5452 for use of these cover glasses and alignment of signals on curves.

When Phankill units are furnished in combination with deflecting or spreadlight cover glasses, they are combined with the inclined glass assembly as shown by Ref. D in Figure 7. In the application of these assemblies to dwarf signals, the standard arrangement is with a 10° glass deflecting light upward, with the prisms on the outside and with the risers on the steps painted flat black.

For adjustment of close-up indication on signals not equipped with Phankill unit, follow instructions in Section III. When equipped with Phankill unit, the close-up prism (as shown in Figure 5) is omitted from the lens assembly and mounted in the front of the Phankill screen (See "N", Figure 7). When so equipped, align close-up indication as outlined in Section III, except the close-up prism adjustment is obtained by loosening the two clamping screws F and revolving the Phankill assembly D until the indication is obtained at the proper point, after which the clamping screws F should be securely tightened.

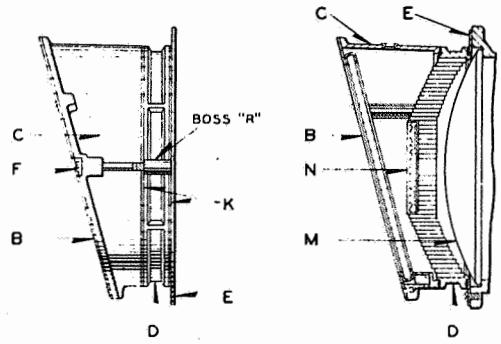

Fig. 7. Phankill Unit with Inclined Cover Glass

V. POINTS TO BE OBSERVED IN MAINTENANCE

1. Replacement of broken lenses in the field should be avoided if at all possible. Due to variations in lenses, proper results in efficiency and alignment are obtained only by returning the signal to the Factory or to a specially equipped railroad shop for optical adjustment. The glass reflector, if damaged, should not be replaced, but the entire reflector assembly may be replaced without loss in alignment or efficiency.

2. Using a lintless cloth, clean both surfaces of each of the lenses by removing the operating unit and hand-hole cover, being careful not to disturb the adjustment of the close-up prism. Clean the windows in the operating unit, and clean both the reflector and lamp bulb, without removing the lamp.

3. To install a lamp in the lamp socket, insert the lamp base into the socket as far as it will go, then turn the lamp clockwise as far as possible, then pull out until the pins in the lamp base are properly seated in the pin seats in the socket.

4. Lamp voltage should be checked periodically and readjusted, if necessary. For further information on lamps, see Instruction Pamphlet U-5037 on "Life, Installation and Replacement of Railway Signal Lamps."
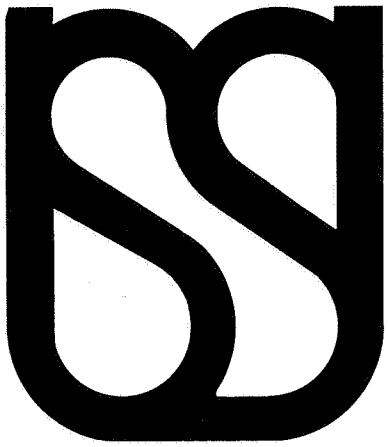
5. A periodic test should be made of the operating unit to determine pick-up and release values, and to detect any improper operation. In case of trouble, replace the unit, and send the defective unit to the Repair Shop for inspection and test per Service Spec. 3079.